ESP32 Sumo Bot Wiring Diagram

Technical schematic - Series battery configuration with dual buck converters

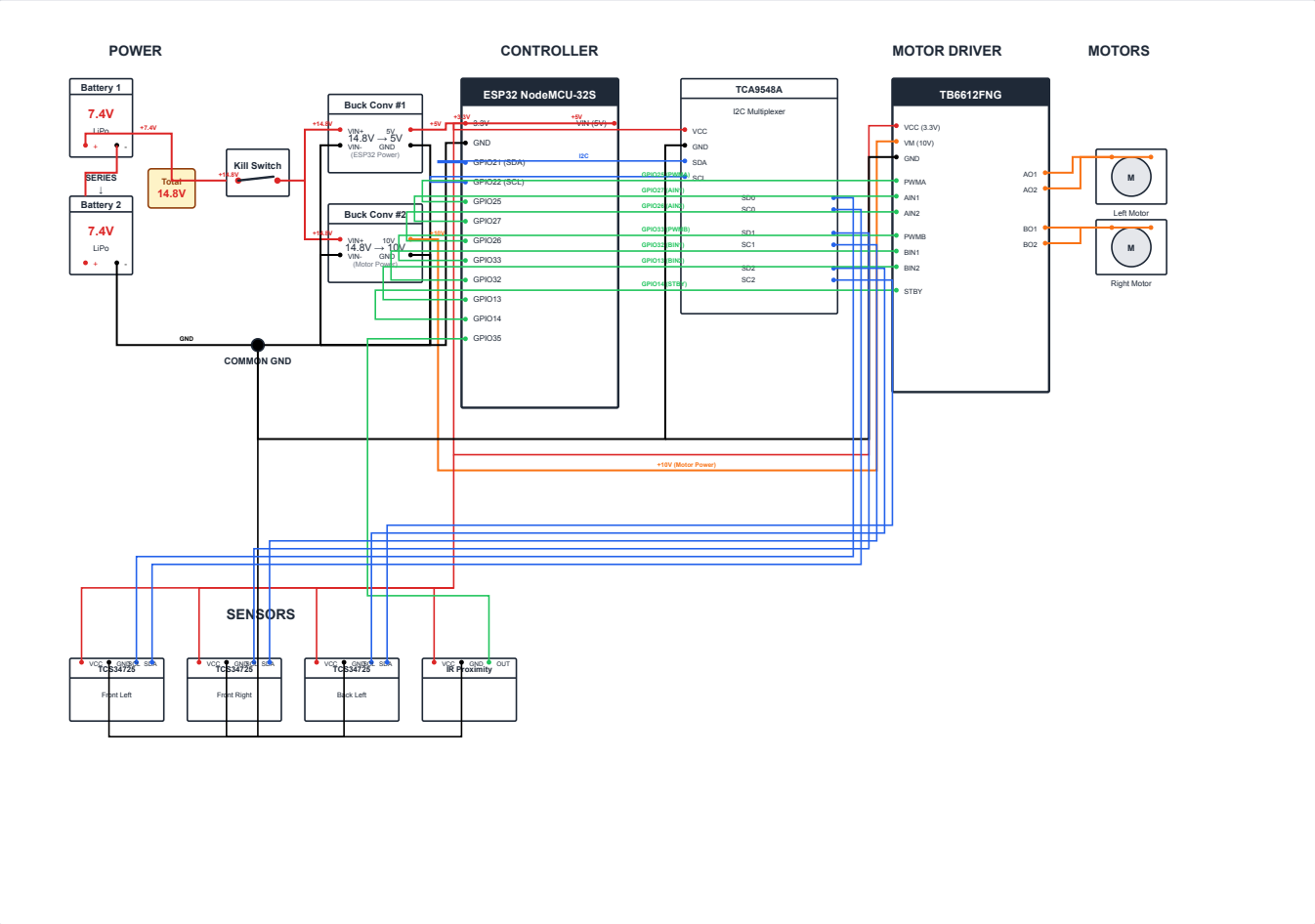

Battery Power (+)

Ground (-)

GPIO/Control

Motor Power

I2C (SDA/SCL)

Power Architecture

- 2x 7.4V LiPo batteries in SERIES
- Total voltage: 14.8V
- Kill switch on main power line
- Buck #1: 14.8V → 5V (ESP32)
- Buck #2: 14.8V → 10V (Motors)
- Common ground required

Motor Driver (TB6612FNG)

- VCC: 3.3V from ESP32
- VM: 10V from Buck #2
- PWMA: GPIO25
- AIN1/AIN2: GPIO27/GPIO26
- PWMB: GPIO33
- BIN1/BIN2: GPIO32/GPIO13
- STBY: GPIO14

I2C Configuration

- SDA: GPIO21
- SCL: GPIO22
- TCA9548A Ch0: Front-left TCS34725
- TCA9548A Ch1: Front-right TCS34725